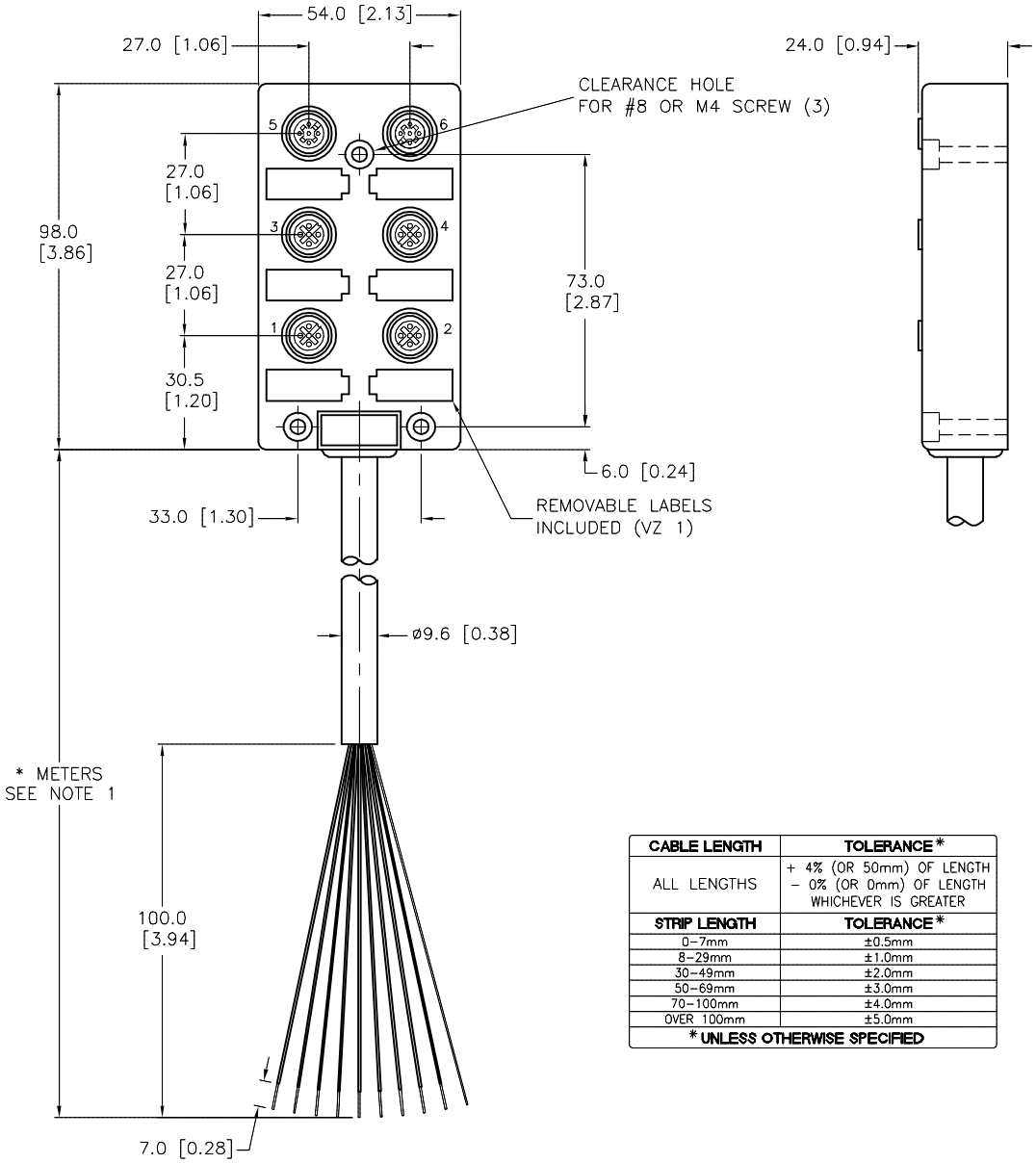

SPECIFICATIONS	
HOUSING MATERIAL/COLOR	NYLON/YELLOW
MOLDED HEAD MATERIAL/COLOR	TPU/BLACK
CONTACT MATERIAL/PLATING	BRASS/GOLD
OPERATING CURRENT	4.0 A/PORT, 10.0 A TOTAL
OPERATING VOLTAGE	10–48 VDC
OUTER JACKET MATERIAL/COLOR	PVC/YELLOW
CONDUCTOR INSULATION MATERIAL	PVC
NUMBER OF CONDUCTORS [AWG]	9x18 AWG
DRAIN/SHIELD	20 AWG DRAIN/POLYESTER FOIL SHIELD
TEMPERATURE RANGE	−30˚C to +80˚C (−22˚F to +176˚F)
PROTECTION CLASS	IEC IP67, ONLY WHEN ALL RECEPTACLES ARE COVERED WITH PLUGS OR CONNECTORS.

WIRING DIAGRAM

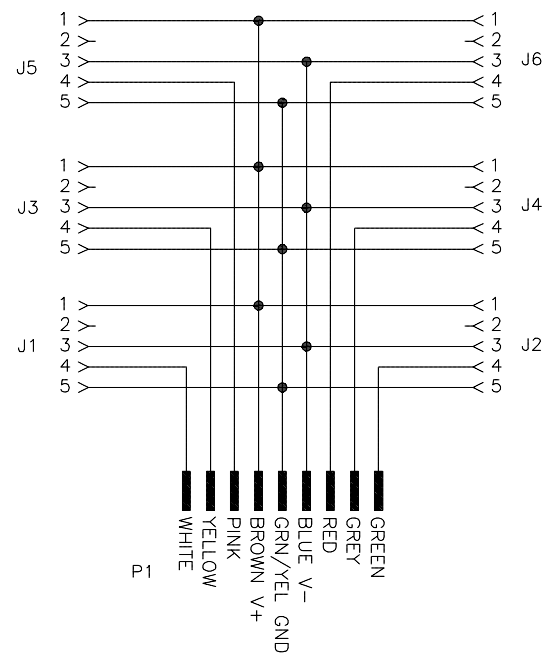

CABLE LENGTH	TOLERANCE *
ALL LENGTHS	+ 4% (OR 50mm) OF LENGTH − 0% (OR 0mm) OF LENGTH WHICHEVER IS GREATER
STRIP LENGTH	**TOLERANCE ***
0–7mm	±0.5mm
8–29mm	±1.0mm
30–49mm	±2.0mm
50–69mm	±3.0mm
70–100mm	±4.0mm
OVER 100mm	±5.0mm
*** UNLESS OTHERWISE SPECIFIED**	

SOURCE DRAWING - FOR REFERENCE ONLY

NOTES:

1. "*" INDICATES CABLE LENGTH IN METERS. CONTACT TURCK TO ORDER SPECIFIC LENGTHS.

REV	DESCRIPTION	BY	DATE	ECO NO.
C	UPDATE CABLE DIAMETER	KMY	01/31/12	36342

RELATED DOCUMENTS
1.
2.
3.
4.

3RD ANGLE PROJECTION

THIS DRAWING IS CONFIDENTIAL AND THE PROPERTY OF TURCK INC. USE OF THIS DOCUMENT WITHOUT WRITTEN PERMISSION IS PROHIBITED.

TURCK

3000 CAMPUS DRIVE
MINNEAPOLIS, MN 55441
1-800-544-7769
(763) 553-7300
(763) 553-0708 fax
www.turck.us

MATERIAL: SEE SPECIFICATIONS

FINISH: SEE SPECIFICATIONS

ALL DIMENSIONS DISPLAYED ON THIS DRAWING ARE FOR REFERENCE ONLY

CONTACT TURCK FOR MORE INFORMATION

DRFT: RWC | DATE: 01/18/06

APVD: | SCALE: 1=2.0

UNIT OF MEASUREMENT
MILLIMETER [INCH]

DO NOT SCALE THIS DRAWING

DESCRIPTION: VB 60−*

IDENTIFICATION NO.:

REV: C

FILE: 777000401

SHEET 1 OF 1